UISP Wave Nano

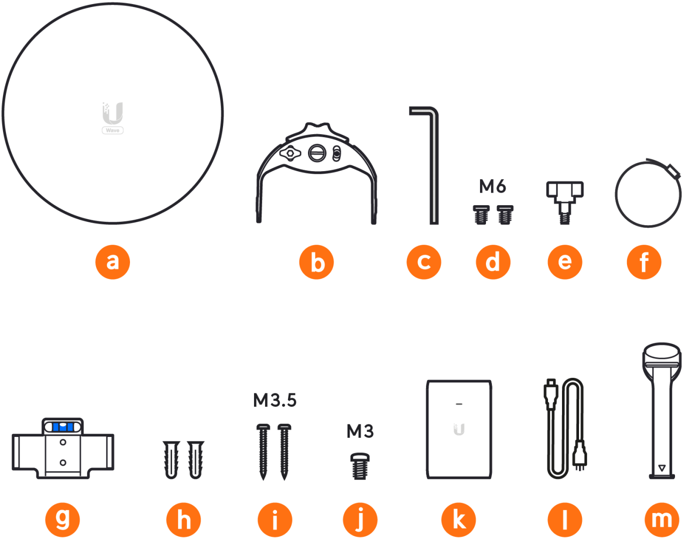
M6
M3.5
M3
a
b
c
d
e
f
g
h
i
j
k
l
m

1

a

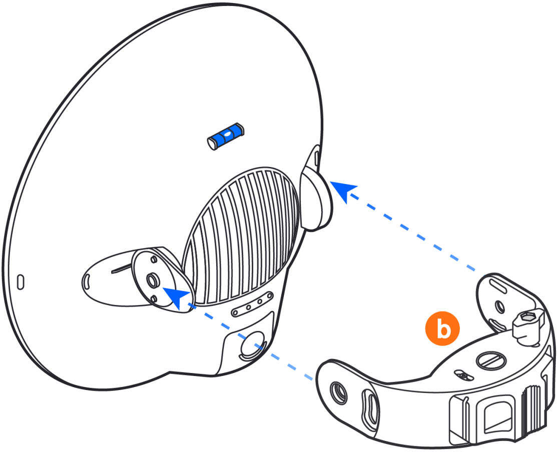

2

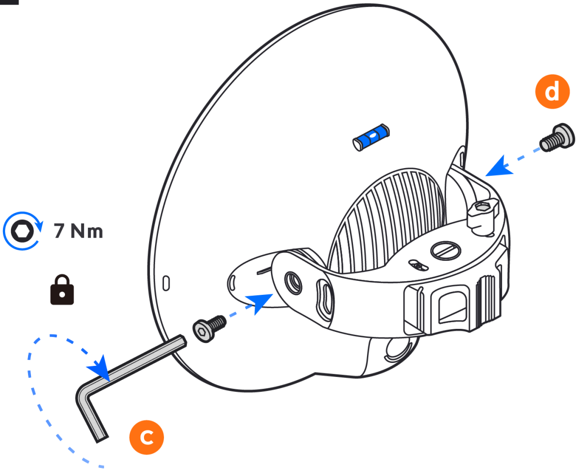

3

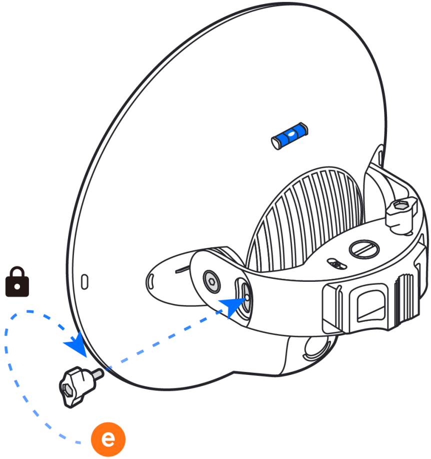

4

A

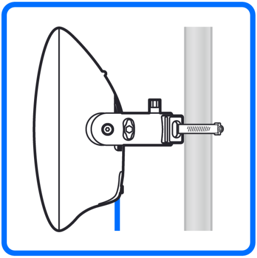

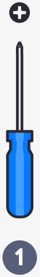

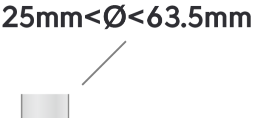
25mm<Ø<63.5mm

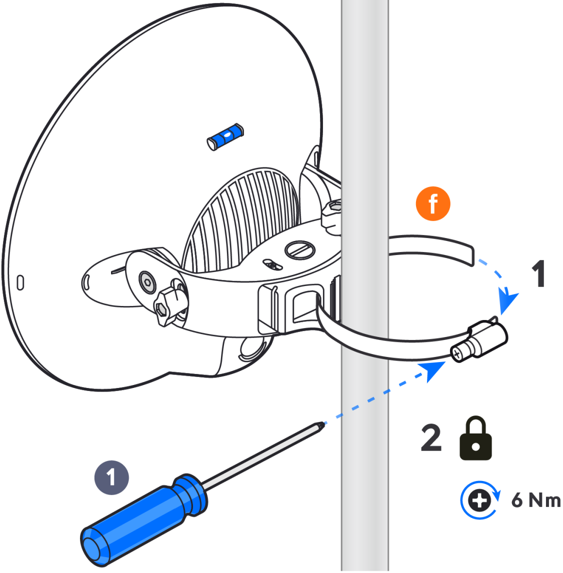

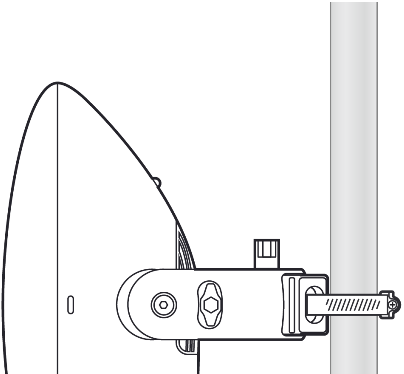

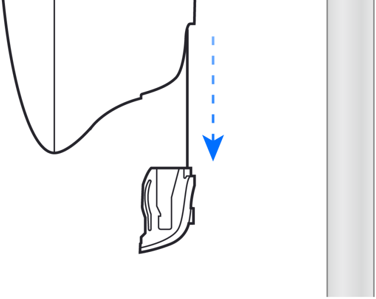

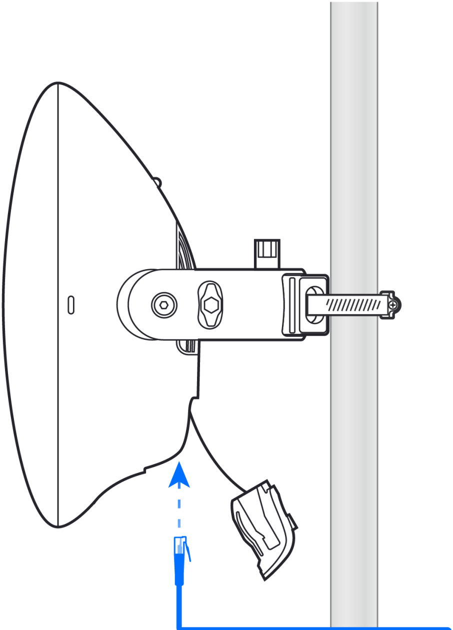

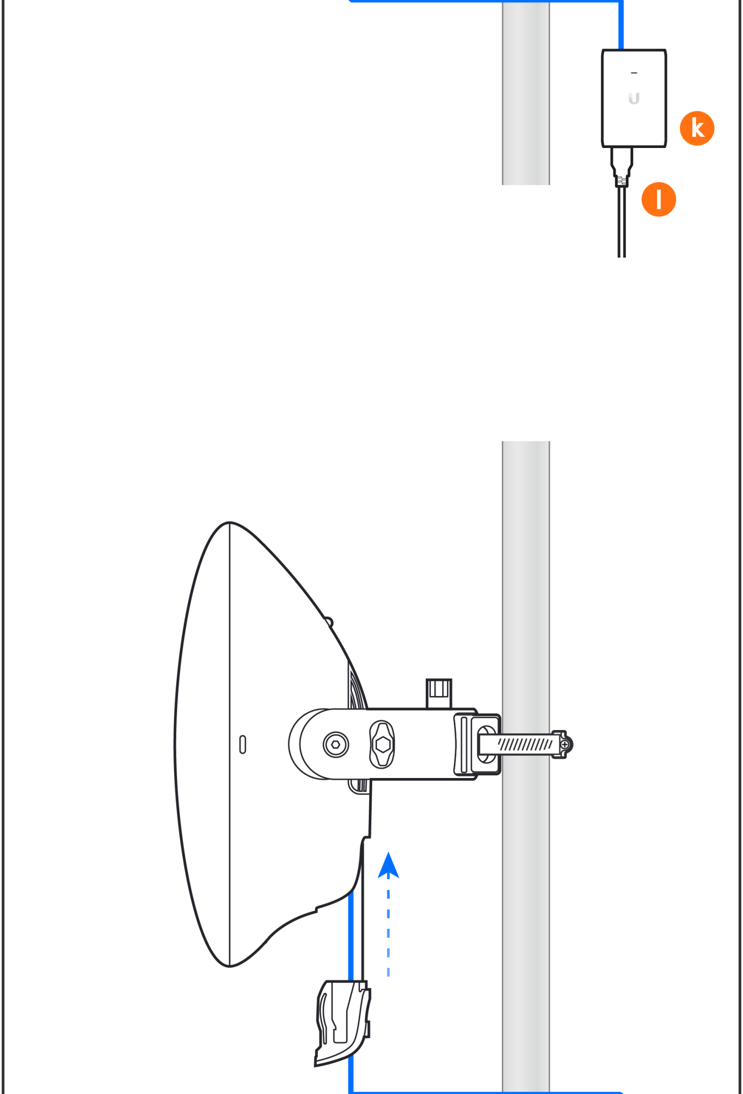

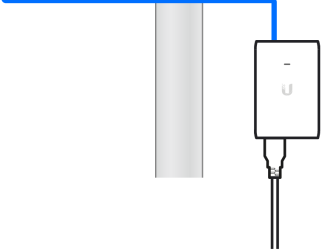

B

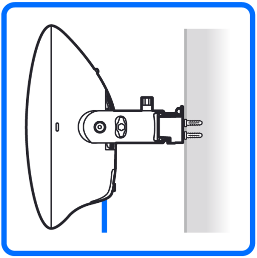

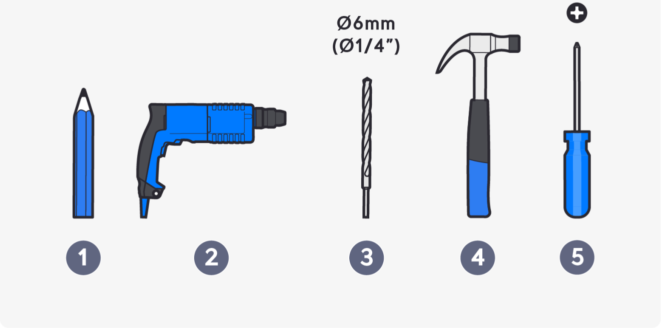
Ø6mm
(Ø1/4")
1
2
3
4
5

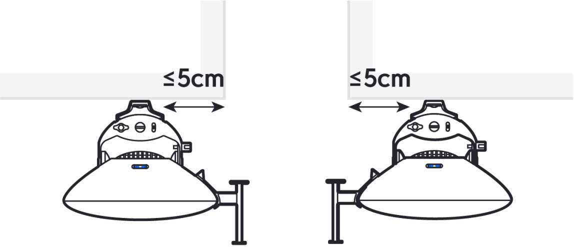

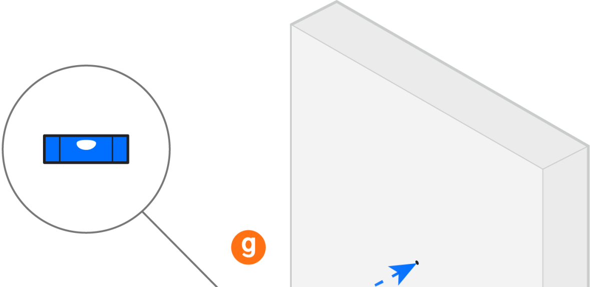

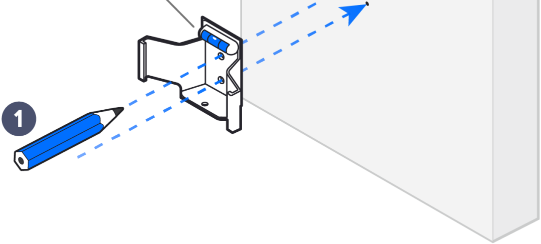

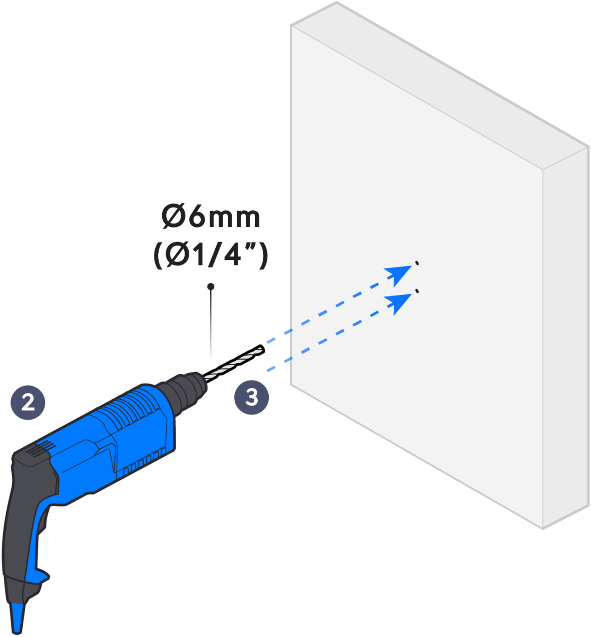

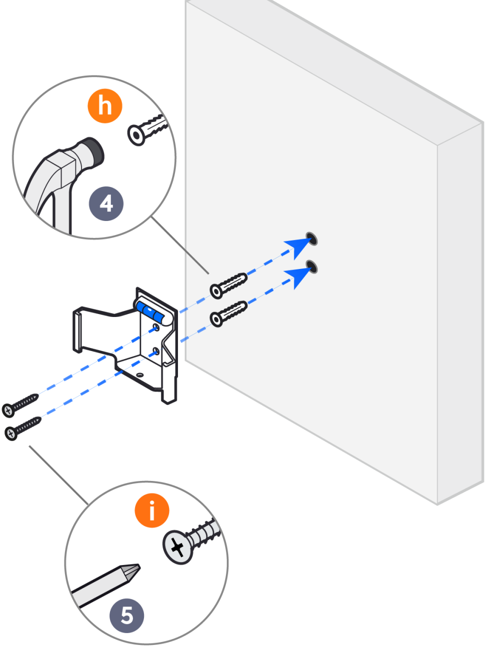

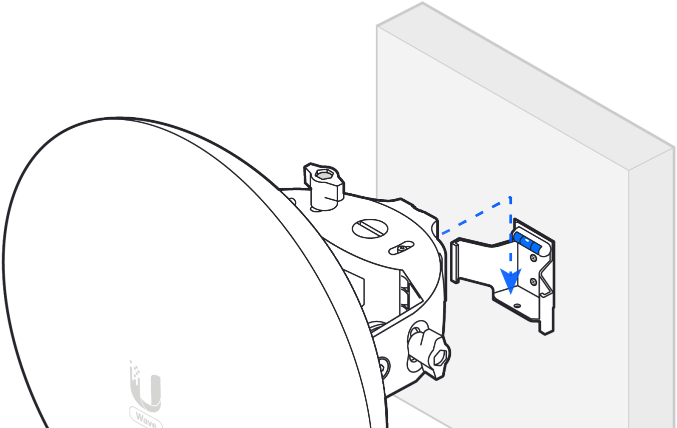

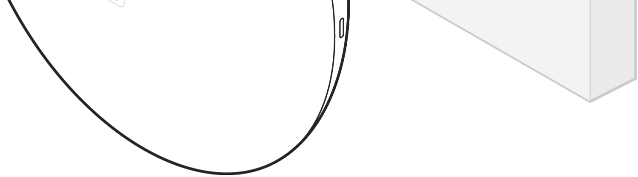

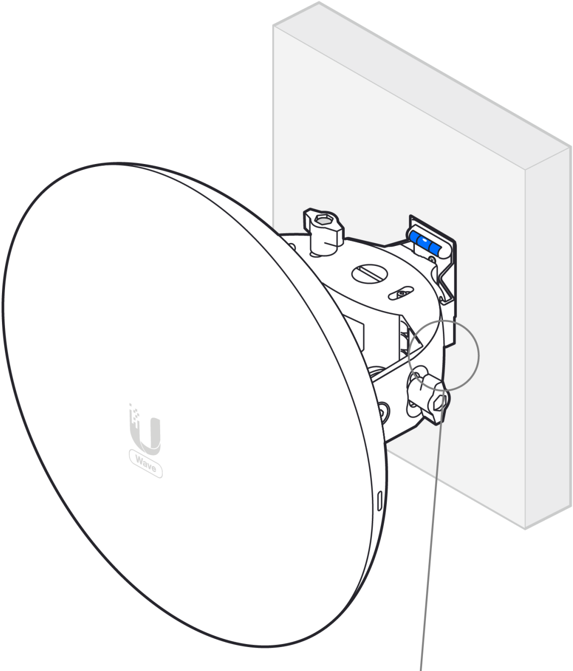

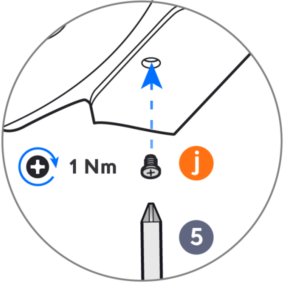

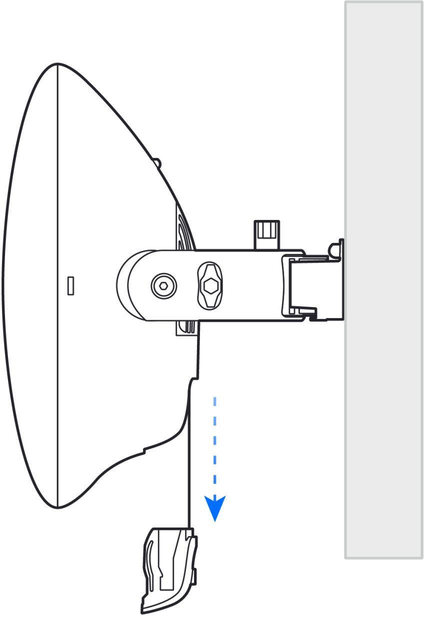

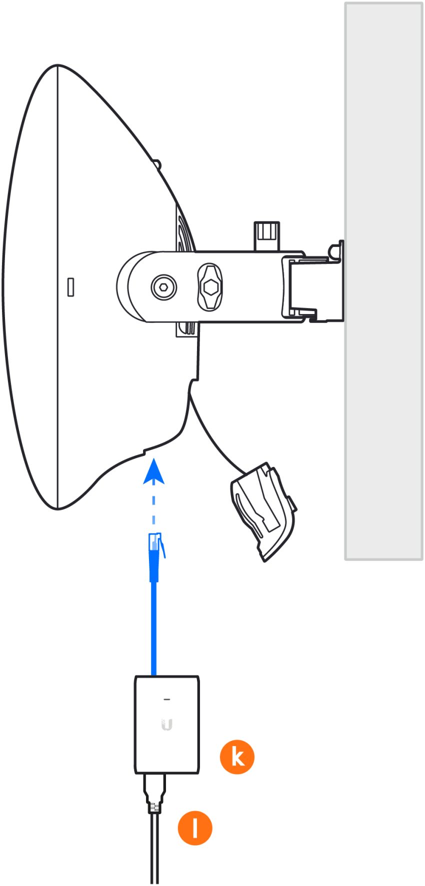

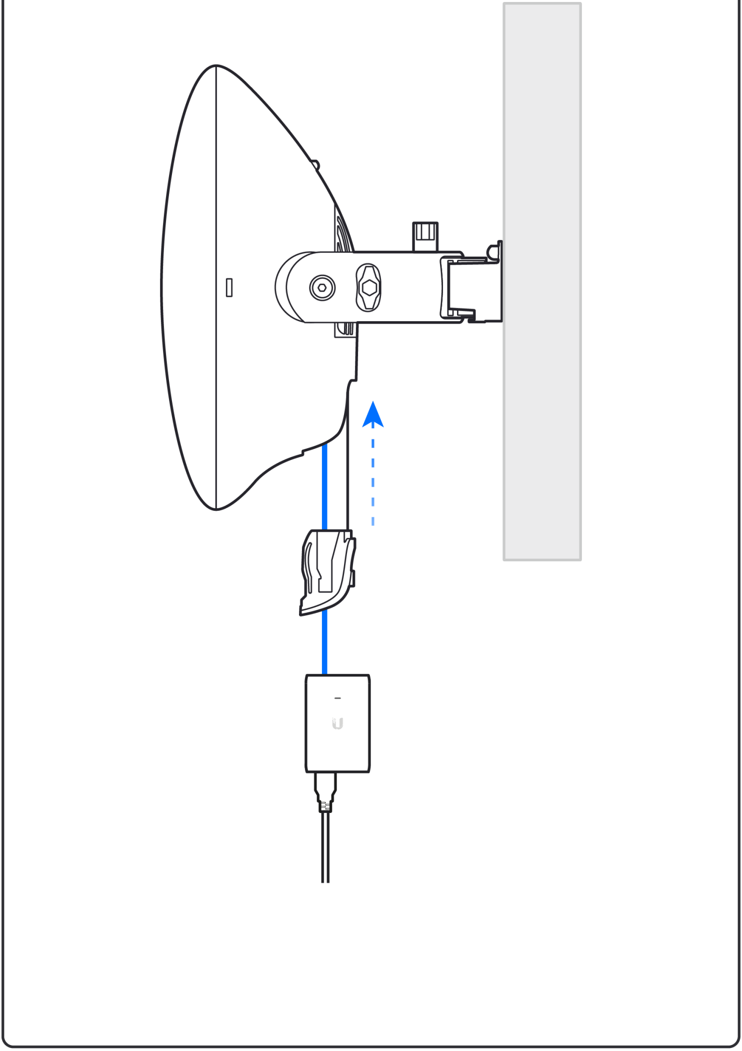

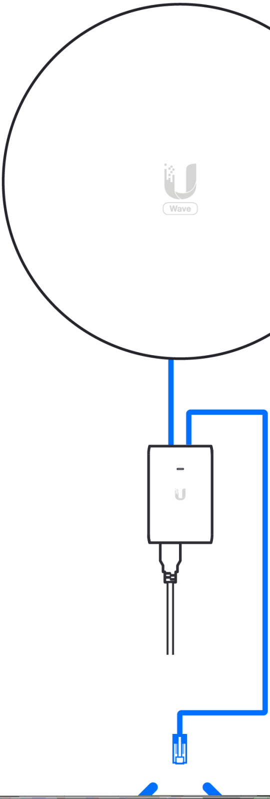5