THIS COPY IS PROVIDED ON A RESTRICTED BASIS AND IS NOT TO BE USED IN ANY WAY DETRIMENTAL TO THE INTERESTS OF PANDUIT CORP.

Part Number	Width in. (mm)	Length ft. (m)	Thickness in. (mm)	Package per Roll	Description	Insulation Color	Weight oz. (gram)
ST17-075-66GR	.75 (19)	66 (20)	.007 (.18)	CELLO WRAP	General Purpose ST17 Green, .75" x 66'X .007"	GREEN	3 (86)
ST17-075-66YL	.75 (19)	66 (20)	.007 (.18)	CELLO WRAP	General Purpose ST17 Yellow, .75" x 66'X .007"	YELLOW	3 (86)
ST17-075-66RD	.75 (19)	66 (20)	.007 (.18)	CELLO WRAP	General Purpose ST17 Red, .75" x 66'X .007"	RED	3 (86)
ST17-075-66BU	.75 (19)	66 (20)	.007 (.18)	CELLO WRAP	General Purpose ST17 Blue, .75" x 66'X .007"	BLUE	3 (86)
ST17-075-66WH	.75 (19)	66 (20)	.007 (.18)	CELLO WRAP	General Purpose ST17 White, .75" x 66'X .007"	WHITE	3 (86)
ST17-075-66BR	.75 (19)	66 (20)	.007 (.18)	CELLO WRAP	General Purpose ST17 Brown, .75" x 66'X .007"	BRROWN	3 (86)
ST17-075-66OR	.75 (19)	66 (20)	.007 (.18)	CELLO WRAP	General Purpose ST17 ORANGE, .75" x 66'X .007"	ORANGE	3 (86)
ST17-075-66GY	.75 (19)	66 (20)	.007 (.18)	CELLO WRAP	General Purpose ST17 GRAY .75" x 66'X .007"	GRAY	3 (86)
ST17-075-66VI	.75 (19)	66 (20)	.007 (.18)	CELLO WRAP	General Purpose ST17 Violet, .75" x 66'X .007"	VIOLET	3 (86)

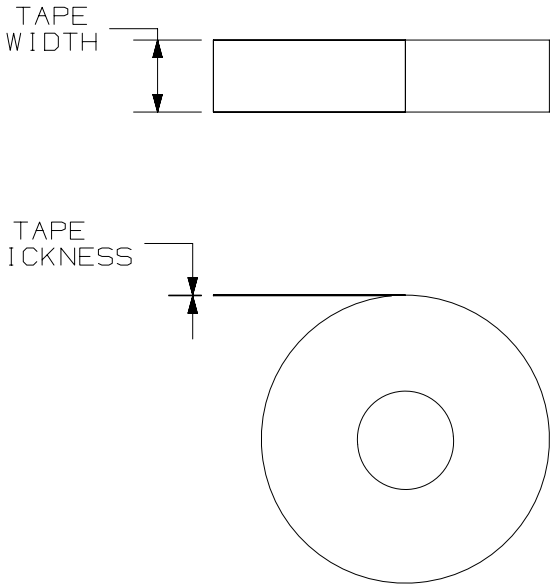

NOTES:
1. VISIT OUR ON-LINE CATALOG AT WWW.PANDUIT.COM FOR A LIST OF CURRENT PARTS APPLICABLE FOR USE WITH THIS PRODUCT.
2. ALL MATERIALS AND COMPONENTS USED MEET THE MATERIAL RESTRICTIONS OF RoHS (EUROPEAN DIRECTIVE 2002/95/EC ON THE RESTRICTION OF HAZARDOUS SUBSTANCES) AS PROPOSED BY THE RoHS TECHNICAL ADAPTATION COMMITEE.
3. MATERIAL: RUBBER ADHESSIVE PRESSURE SENSITIVE VINYL TAPE.
4. TEMPERATURE RATING: -10 °C TO 80 °C.
5. DIELECTRICAL STRENGTH: 7000V.
6. FLAME RETARDANT.
7. MEETS UL-510 AND CSA C 22.2 NO. 197.
8. COMPLIANT TO CALIFORNIA PROP. 65

UL LISTED
Electrical Insulating Tape

CSA CERTIFIED

REV	DATE	BY	CHK	APR	DESCRIPTION	ECN
00	04/29/2019	JSUN	ADAH	JHAC	INITIAL RELEASE	046173/00

PART NUMBER: SEE TABLE	PACKAGING SPEC: PKG-516
PRODUCT SPEC: PS-SH-002	
TITLE: Stronghold Insulating Tape-General Purpose ST17 Customer Drawing	
CUSTOMER DRAWING	
ITEM REVISION NAME: 00351EBR/00	PANDUIT
DATASET FILE NAME: 00351EBR_DC/00	
UNLESS OTHERWISE SPECIFIED, DIMENSIONAL TOLERANCES ARE: IN [mm] .X ± .1 [2.54] .XXX ± .005 [.127] .XX ± .01 [.25] ANGLES ± 1° THIRD ANGLE PROJECTION	MATERIAL: SEE NOTE3
	DRAWING NUMBER: 00351EBR_DC

DRAWN BY	DATE	CHK	SCALE		SIZE
JSUN	04/29/2019	ADAH	NONE	SHT 1 OF 1	A

NXGLOBAL_ASIZE