Contents

About This Manual
Overview
Appearance
Display Screen
Get Started
Power On/Off
Power Your Appliances
Charge Your Power Station
Management
Download EcoFlow App
Bind Device and Set Up Internet
Control via Phone
Explore More
X-Boost: Powering High-Wattage Appliances
Backup for Essential Devices
Storage and Maintenance
Safety Instructions and Compliances
Disclaimer
Safety Instructions
Regulatory Compliance
Appendix
What's in the Box
Accessories
Specifications

About This Manual

- This user manual is applicable to the following products: RIVER 3, RIVER 3 (230), RIVER 3 (10 ms UPS).
- The terms "RIVER 3", "RIVER 3 (230)" and "RIVER 3 (10 ms UPS)" in this manual shall refer to EcoFlow RIVER series product.
- Please note that this manual may be updated without prior notice. If you are reading this manual in PDF format, please note that you can access it online at EcoFlow Support for a better experience and the latest updates.
- The illustrations in this manual use the US version of the product as examples and references. Please refer to the actual product received.
- The availability of certain accessories and features described in this manual may vary depending on your country or region.

Overview

RIVER 3, RIVER 3 (230) and RIVER 3 (10 ms UPS) (hereinafter all referred to as "the power station") are power stations with $LiFePO_4$ battery. They have multiple outputs and charging options to meet your actual needs.

Appearance

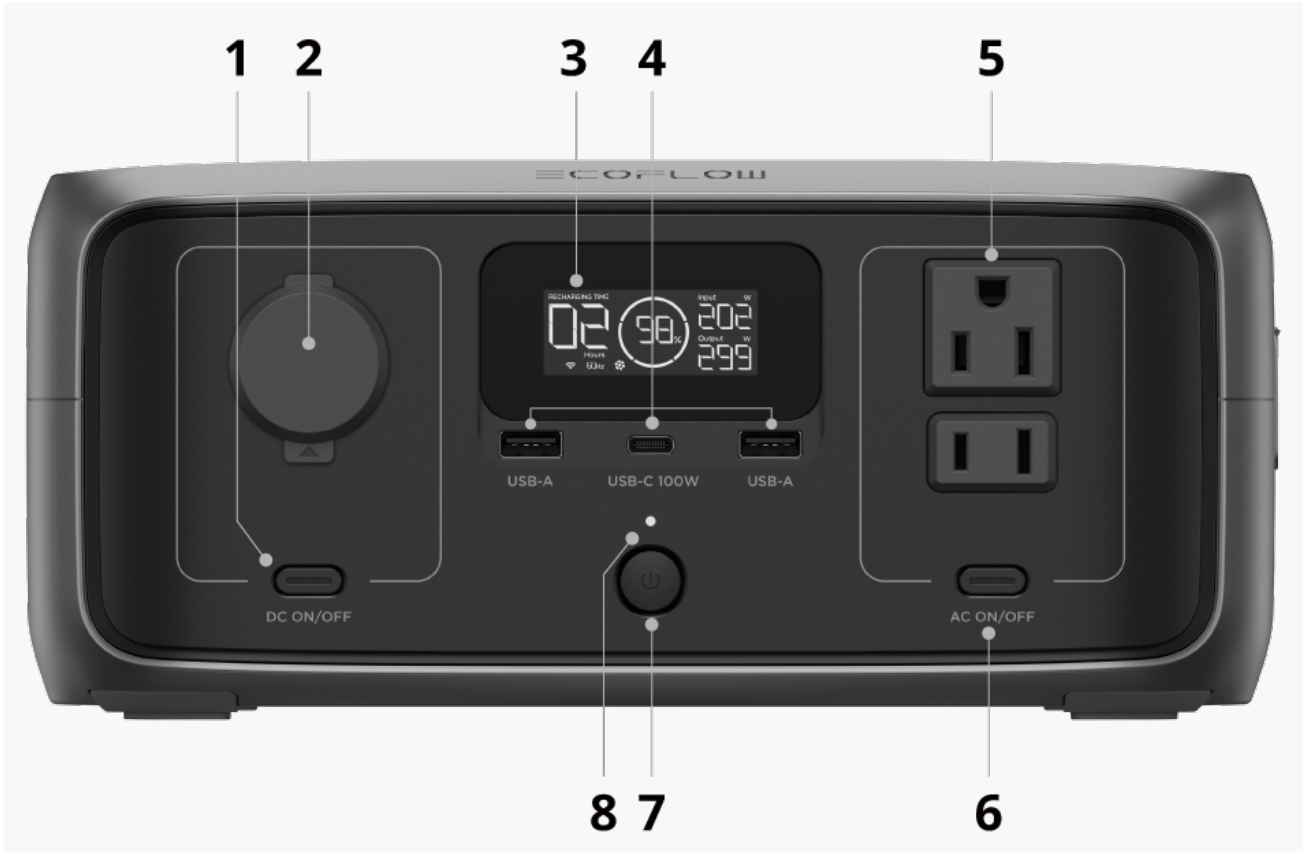

1	**DC Output Button**	Short press once to turn on/off the DC output port.
2	**DC Output Port (Cigarette Lighter)**	Powers up on-board appliances with a rated power ＜ 126W.
3	**Display Screen**	Displays the real-time battery, input power, output power and other operating status.
4	**USB Output Ports (USB-C / USB-A)**	Supplies power via USB-C and USB-A ports to charge phones, laptops, game consoles, or other devices.
5	**AC Output Socket**	Supports X-Boost feature and powers up devices with a rated power ＜300W. **The types and numbers of AC sockets vary by country and region. Please refer to the actual product.**
6	**AC Output Button**	Short press once to turn on/off the AC output socket.
7	**Main Power Button**	Short press to turn on the power station, long press for 3 seconds to turn off.
8	**Main Power Indicator**	Breathes white after the power station powers on.

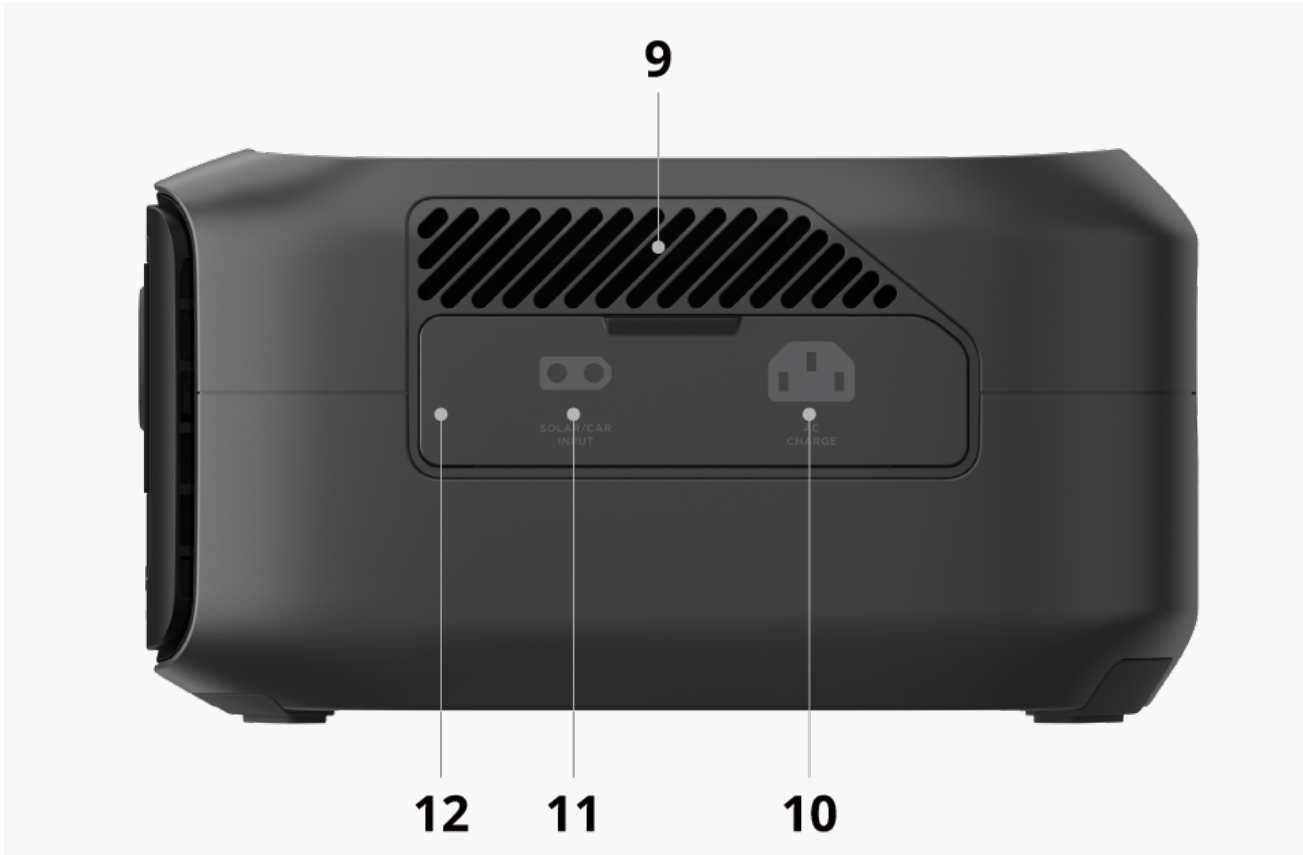

9	Heat Vent	Dissipates the internal heat.
10	AC Input Port	Connects the power station to an AC power source for charging.
11	Solar/Car Input Port	Connects the power station to solar panels or a cigarette lighter socket for charging.
12	Protective Cover	When the input ports are not in use, cover them with the protective cover to prevent dust, moisture, and other contaminants from entering.

Display Screen

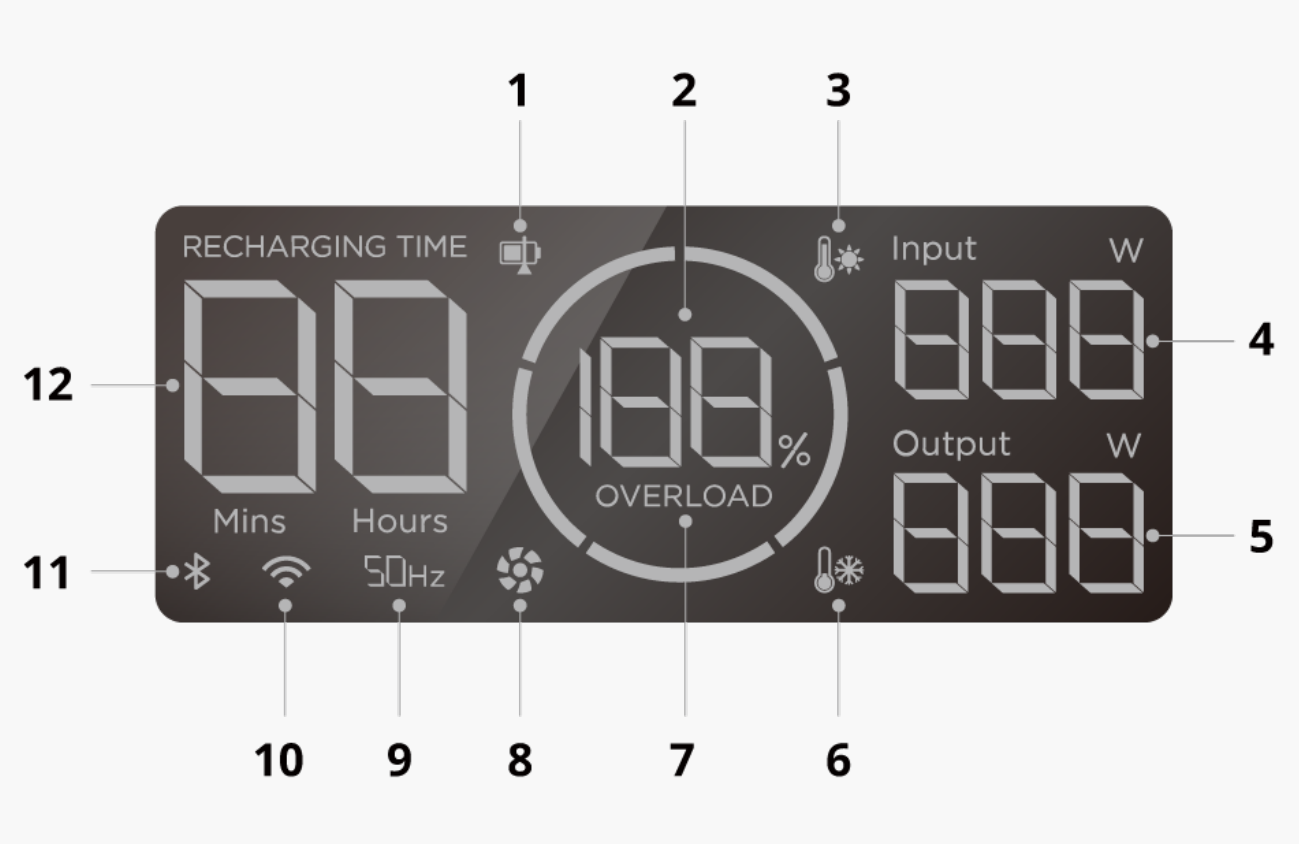

1	Charging / Discharging Limit	7	Overload Warning
2	Battery Level	8	Fan
3	High Temperature Warning	9	AC Output Frequency
4	Total Input Power	10	Wi-Fi
5	Total Output Power	11	Bluetooth
6	Low Temperature Warning	12	Remaining Charging / Discharging time

Error Message

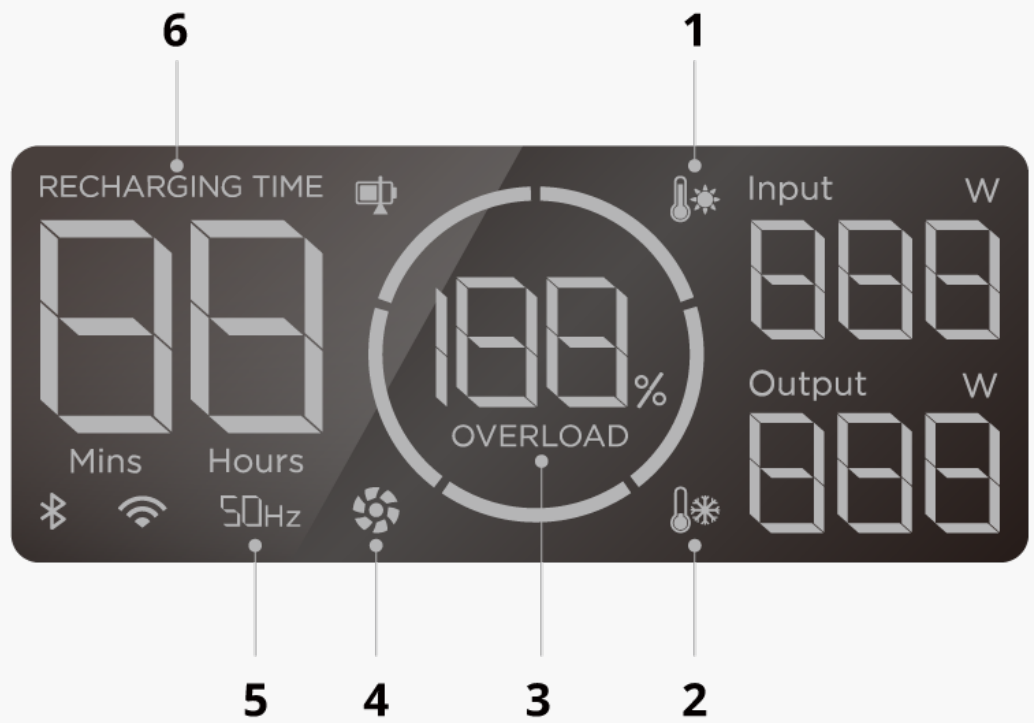

Flashing Icon	Problem	Solution
1	High Temperature	Stop using the product. Move it to a well-ventilated place and keep it away from heat source. The error message will clear when the product's temperature falls to normal levels.
2	Low Temperature	Move the product to a warmer place. The error message will clear when the product's temperature rises to normal levels.
3, 5, 6	AC Charging Overload	Remove the AC charging cable. After the error message clears automatically, connect the AC charging cable and try to use the product again.
3, 5	AC Discharge Overload	Remove the device(s) connected to the AC output port(s). After the error message clears automatically, try to use the product again.
4	Fan Blocked	Remove all connected charging cables and turn off the product. Check for and remove any foreign objects blocking the heat vent before you try to use the product again.
5	Internal Communication Failure	Stop using the product. Remove all connected charging cables and turn off the product. Wait for 1 min before you turn on the product again.

- For error messages not covered in the table, view detailed messages and solutions in the EcoFlow app. If the problem persists, stop using the product immediately (do not attempt to charge or discharge it) and consult EcoFlow customer service.

Get Started

Power On/Off

Power On: Short press the main power button

Press the main power button again to turn off the display screen. If the power station is not used for 5 minutes, it will enter hibernation and the display screen will turn off.

Power Off: Long press the main power button for about 3 seconds

Tip:
When the power station is charging, it can't be turned off by long pressing the main power button unless the charging cable is unplugged first.

Power Your Appliances

Via USB Output Port

Connect your devices directly to the USB ports on the power station.

Via AC Output Socket

Press the **AC output button** once to turn on/off the AC output socket.

When using the AC output sockets, make sure that the sum power of all loaded appliances is less than the rated power of the sockets (Refer to X-Boost instructions for details about power limitations with X-Boost).

Tip:

AC Timeout Tip: The AC output port of the power station will automatically turn off if the port is idle for a certain period. When the power station is connected to intermittent loads like refrigerators or air conditioners, this feature may be triggered. To ensure continuous power supply for critical uses, such as storing medicines, vaccines, the perishables, or other valuable items in a refrigerator, set the power station's AC timeout interval to never in the EcoFlow app. Additionally, regularly check the power station's battery level.

Via DC Output Port (Cigarette Lighter)

Press the **DC output button** once to turn on/off the DC output port (cigarette lighter).

When powering up your appliance via the DC output port, please make sure that it can meet the appliance's starting current requirements. Otherwise, the appliance may not be able to start normally (subject to actual testing).

Charge Your Power Station

From a Wall Outlet

Connect the power station's AC input port to a wall outlet using the provided AC charging cable.

Maximum AC Input Power:
US/JP/BR: 320W
CN/EU/ZA/UK/AU/KR/CH: 305W

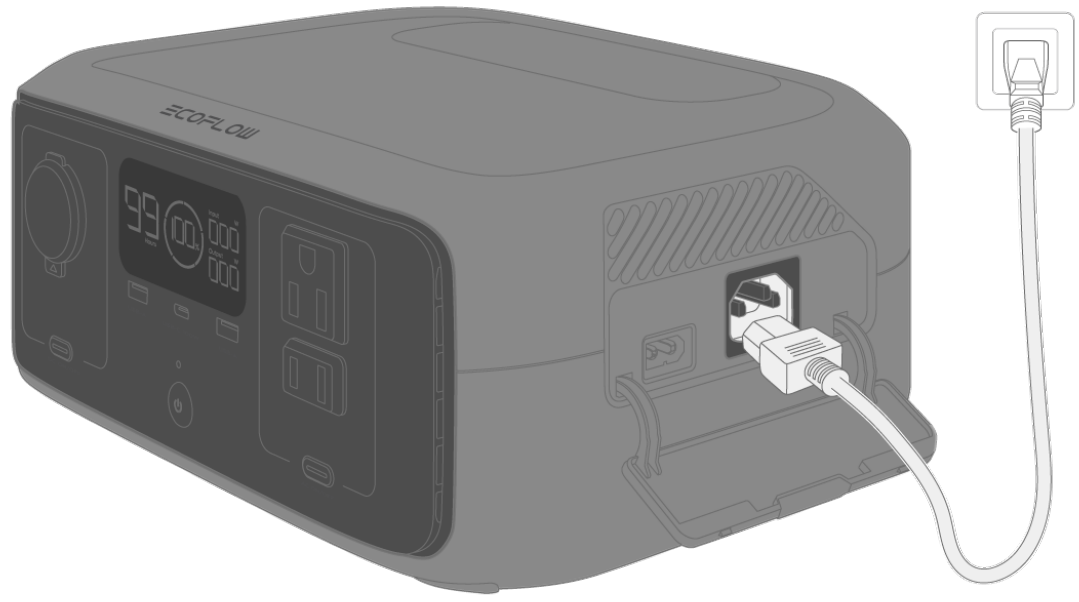

It's recommended that you use a power socket with a capacity of more than 10A and ensure that the working current of the socket is constantly greater than 10A.

For AC charging, use the AC charging cable included in the package and plug the cable directly into a wall outlet instead of an extension socket.

From Solar

Connect the power station's solar input port to solar panels using a solar charging cable.

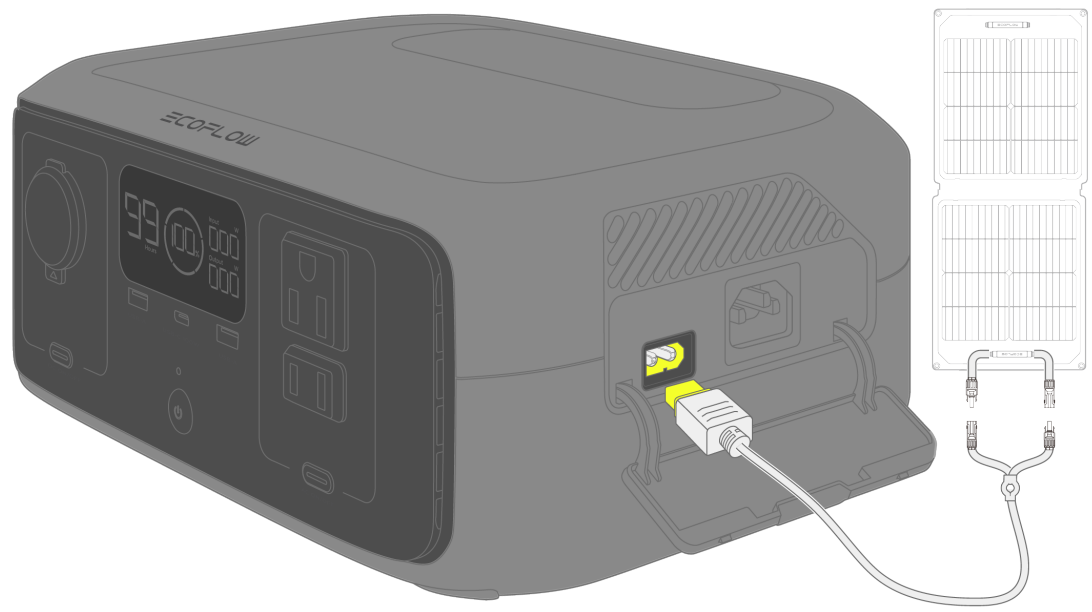

The solar charging cable (solar to XT60i charging cable) and the solar panel are not included in the package.

When using an EcoFlow solar panel to charge the product, connect them according to the instructions in the user manual.

Before connecting the solar panel, ensure that the output voltage of the panel is less than 30V to avoid product damage.

From a Car Cigarette Lighter

Connect the car input port of the power station to your vehicle's cigarette lighter socket using the provided car charging cable.

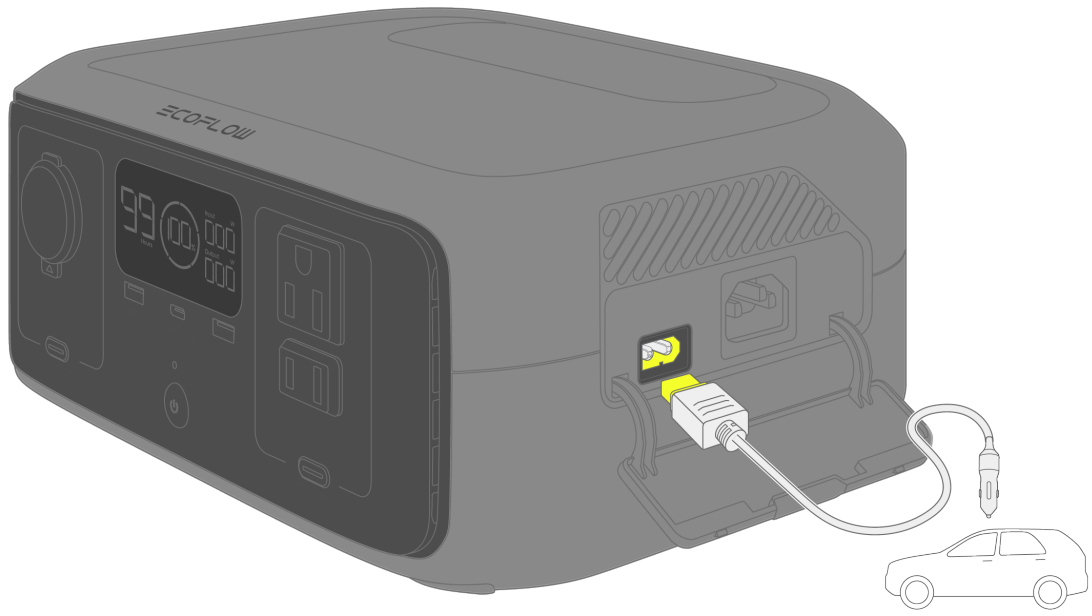

To avoid failure to start the vehicle due to insufficient car battery, start the vehicle first before you begin car charging. In addition, make sure that the car charging cable is securely connected to the cigarette lighter socket.

Management

Download EcoFlow App

EcoFlow offers a companion app for device management. With this mobile application, you can:

- Enjoy all-in-one control of your EcoFlow devices from anywhere.
- Monitor power consumption details seamlessly with real-time updates.
- Personalize your energy scheme with an array of customizable options.
- Promptly receive in-app troubleshooting and firmware updates.

Scan the QR code or download it at:
https://download.ecoflow.com/app

Bind Device and Set Up Internet

After successfully registering an EcoFlow account, bind your EcoFlow devices to your account to ensure remote access to the device's settings.

To bind a new EcoFlow device:

1. Visit the EcoFlow app and log into your EcoFlow account.
2. Tap the Add Device button or ➕ icon in the top right corner to search for new EcoFlow devices.
3. Select your EcoFlow device and follow the pop-up instructions to complete device binding and Wi-Fi setup.

Tip:

Unable to discover this power station via Bluetooth? Try the following:

- a. Power-off: Press and hold the main power button for about 3 seconds to turn off the power station.
- b. Reset Bluetooth: While the power station is turned off, press and hold the main power button until the screen displays power-on animation twice to reset all Bluetooth and Wi-Fi connections.
- c. Power on & Retry: Press the main power button to turn on the power station, and start searching again.

Control via Phone

With the EcoFlow app, you can manage all your EcoFlow binding devices on your phone.
The power station supports Wi-Fi and Bluetooth connections, adapting to varying network conditions to ensure convenient access to device settings.

With Internet

When Wi-Fi is stable, you can access the device settings via the internet. This method is always recommended to ensure your EcoFlow device can receive timely firmware updates and pushes.

Without Internet

If the Wi-Fi connection is limited, you can manage the power station locally via Bluetooth.

Explore More

X-Boost: Powering High-Wattage Appliances

The power station's AC output sockets support X-Boost. They can power devices rated at up to 600W (450W for the JP version) without incurring operation failure caused by overload protection.

How do I use this feature?

- X-Boost is enabled by default. Connect any high-wattage appliance to an AC output socket on the power station to use this feature.
- You can enable/disable X-Boost in the EcoFlow app.
- X-Boost is unavailable when the power station is in bypass mode*.

*Bypass mode: When the power station is connected to the grid power through its AC input port and to devices via its AC output sockets, the devices will receive AC power directly from the grid instead of from the power station.

What kind of devices does X-Boost support?

X-Boost is suitable for heating and motor-driven devices. It does not support devices with voltage protection (such as precise instruments). Conduct your own tests to check whether your devices support X-Boost.

Backup for Essential Devices

You can use the power station to back up power for essential household appliances. When a power outage occurs and appliances can no longer use power from the grid, the power station automatically transfers its battery power for use by connected appliances.

How do I use this feature?

1. Connect the power station to a wall outlet to access grid power.
2. Connect any appliances to the power station's AC output socket so the power station can provide them with power to operate during a power outage.

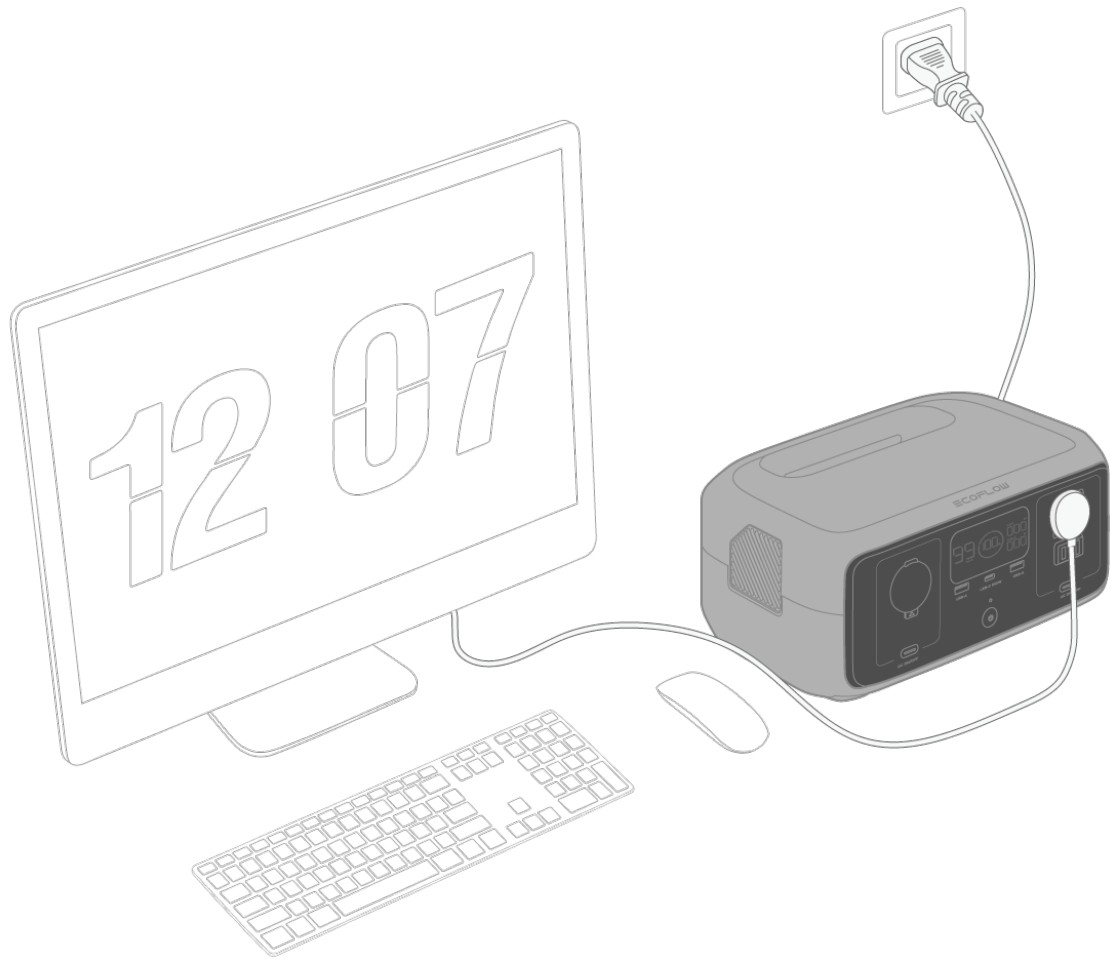

What is the transfer time?

- **RIVER 3 / RIVER 3 (230)**

  The power station supports emergency power supply (EPS) with a transfer time within 20ms.

- **RIVER 3 (10 ms UPS)**

  The power station supports uninterrupted power supply (UPS) with a transfer time within 10ms.

What devices can I back up power for?

Before using this feature, make sure the transfer time meets the needs of your device. As for RIVER 3 and RIVER 3 (230), do not connect them to any device that requires an uninterrupted power supply (such as desktops, NAS servers, data servers and workstations).

It's recommended that you power only one device (with maximum power <300W) at a time to avoid triggering overload protection.

Storage and Maintenance

Storage

- Storage Temperature: –10°C to 45°C (14°F-113°F)
- Do not store the product in places where the temperature exceeds 45°C (113°F) or falls below –10°C (14°F).
- Store the product in a tidy, dry, and well-ventilated place.
- Keep the product away from liquids, intense heat, and sharp objects.
- For long-term storage of the product, follow these steps every 3 months to maintain battery health:
  1. Discharge the product to 0% battery level.
  2. Charge the product to 60% battery level.
     Note: the product will not be covered by the warranty if it is not charged or discharged for more than 6 months.

Maintenance

- Cleaning
  Use a soft, dry cloth to wipe and clean the product.

- Maintaining Battery Health
  Avoid leaving the product unused for extended periods of time.
  Charge and discharge the product every 3 months to increase its lifespan.

Safety Instructions and Compliances

Disclaimer

Please read the product document and ensure that you understand it fully before using the product. After reading this document, keep it for future reference. Improper use of this product may cause serious injury to yourself or others, or cause product damage and property loss. Once you use this product, it is deemed that you understand, approve and accept all the terms and content in this document. EcoFlow is not liable for any loss caused by the user's failure to use the product in compliance with the product document. In compliance with laws and regulations, EcoFlow reserves the right to the final interpretation of this document and all documents related to the product. This document is subject to changes (updates, revisions, or termination) without prior notice. Please visit EcoFlow's official website to obtain the latest product information: https://www.ecoflow.com/.

Safety Instructions

Transportation

1. Do not subject this product to severe impacts, vibrations, or drops. In case of a severe impact, stop using this product immediately and turn off the power.
2. Do not carry this product onto a plane.

Environment

1. Do not use the product near a heat source, such as a fire source or a heating furnace.
2. Do not place the battery in a low air pressure environment, as this may cause flammable liquids or gases to leak or even an explosion.
3. Do not get the product wet or immerse it in any liquid. When using the product in wet environments like rainy areas or places near water, protect it with a waterproof bag.
4. Follow the environment temperature requirements specified in the product specification to use or store the product. Avoid degradation or damage to the product, or risks to personal safety due to excessively high or low temperatures.
5. Do not use the product in an environment with strong static electricity or magnetic fields.
6. Keep the product out of reach of children and pets. If the product is to be used near children, they should be closely supervised.
7. Keep the product away from fumes, smoke, steam, and dust.
8. Store the product in a tidy, dry, and well-ventilated place.

Operation

1. Do not disassemble, repair, or modify this product by yourself. For any repair service, please contact EcoFlow Customer Service.
2. Always disconnect the product from all external power sources before attempting any service or maintenance.
3. To reduce risk of damage to the electric plug and cord, pull the plug rather than the cord when disconnecting the product.
4. Do not pierce the product with sharp objects.
5. Do not put fingers or hands into the product.
6. Do not insert wires or other metal objects into the product to prevent short circuits.
7. Do not block or hinder the heat dissipation system of the product during operation.
8. Do not use any unofficial or unrecommended components or accessories. For any replacements, please contact EcoFlow for further assistance.
9. Do not operate this product with a damaged cord or plug.
10. Do not stack any heavy objects on the product.
11. Place the product on a stable and flat surface. Avoid damage to the device or personal injury due to the product falling or tipping over.
12. Use a soft, dry cloth to wipe and clean the product.
13. **AC Timeout Tip**: The AC output port of the power station will automatically turn off if the port is idle for a certain period. When the power station is connected to intermittent loads like refrigerators or air conditioners, this feature may be triggered. To ensure continuous power supply for critical uses, such as storing medicines, vaccines, the perishables, or other valuable items in a refrigerator, set the power station's AC timeout interval to never in the EcoFlow app. Additionally, regularly check the power station's battery level.
14. **Medical Equipment Limit**: The product is not intended for powering life-sustaining medical equipment, including but not limited to medical-grade ventilators (hospital-grade CPAP: Continuous Positive Airway Pressure) or artificial lungs (ECMO: Extracorporeal Membrane Oxygenation). If you plan to use it for other medical equipment, consult with the equipment’s manufacturer first to ensure there are no restrictions on using an external power source with their equipment.

15. **Medical Equipment Interference**: When in use, power station products will generate electromagnetic fields, which are likely to affect the normal operation of medical implants or personal medical equipment such as pacemakers, cochlear implants, hearing aids, defibrillators, etc. If these types of medical equipment are being used, please contact the equipment's manufacturer first to inquire about any restrictions on the use of such equipment. These measures are fundamental to ensure a safe distance between the medical implants (for example, pacemakers, cochlear implants, hearing aids, defibrillators, etc.) and this product while in use.
16. **GROUNDING INSTRUCTIONS**: This product must be grounded. If it should malfunction or breakdown, grounding provides a path of least resistance for electric current to reduce the risk of electric shock. For your safety, EcoFlow provides a power cord with an equipment grounding conductor and a grounding plug. The plug must be plugged into an outlet that is properly installed and grounded in accordance with all local codes and ordinances. WARNING – Improper connection of the equipment grounding conductor can result in a risk of electric shock. If you encounter the following situations, consult a qualified electrician instead of modifying the plug provided with the product: -You are unsure whether the product is properly grounded; -You find that the plug provided with the product does not fit the outlet.
17. **Risk of Electric Shock**: Never use the product to power tools to cut or access live parts or live wirings, or materials that may contain live parts or live wirings inside, such as building walls, etc.
18. **Use in Repair Facility**: During use in a repair facility like a vehicle repair center, workshop, or any other place where repairs are conducted, do not place the product on the floor, or at a height less than 457 mm (18 inches) above the floor.
19. Do not use a battery pack or appliance that is damaged or modified. Damaged or modified batteries may exhibit unpredictable behavior resulting in fire, explosion or risk of injury.
20. For long-term storage, discharge and charge the product every three months (firstly discharge it to 0%, then charge it to 60%); the product will not be covered by the warranty if it is not charged or discharged for more than 6 months.

In Case of Emergency

1. In case of emergency, take precautions against electric shock before touching the product, such as wearing insulating gloves.
2. If the product gets wet, stop using it immediately and refrain from further operation or powering it on. Place the product in a secure, waterproof, and well-ventilated area, then contact EcoFlow Customer Service for assistance.
3. If the product falls into water, place it in a secure, waterproof, and well-ventilated area, and keep away from the product until it is completely dry. The dried product should not be used again and must be properly disposed of according to local laws and regulations.
4. If the product catches fire, we recommend that you use the fire extinguishers in the following order: water or water mist, sand, fire blanket, dry powder, and finally a carbon dioxide fire extinguisher. And then dispose of the product in accordance with local battery recycling and disposal laws and regulations.

Recycling and Disposal

1. The product with severe damage, malfunction, or depleted battery life

should be properly disposed of or recycled.

2. The product contains batteries. Please dispose of the product following local laws and regulations for battery disposal and recycling. Do not dispose of it with household waste to avoid environmental pollution and safety hazards.
3. If possible, ensure the battery is completely discharged (to 0% capacity) before disposing of the product. If not, refrain from placing the battery directly into a battery recycling box. Instead, contact a professional battery recycling company for proper handling.

Regulatory Compliance

FCC Compliance Statement

Any Changes or modifications not expressly approved by the party responsible for compliance could void the user's authority to operate the equipment.
This device complies with part 15 of the FCC Rules. Operation is subject to the following two conditions:
(1)This device may not cause harmful interference, and
(2)this device must accept any interference received, including interference that may cause undesired operation.
Note: This equipment has been tested and found to comply with the limits for a Class A digital device, pursuant to part 15 of the FCC Rules. These limits are designed to provide reasonable protection against harmful interference when the equipment is operated in a commercial environment. This equipment generates, uses, and can radiate radio frequency energy and, if not installed and used in accordance with the instruction manual, may cause harmful interference to radio communications. Operation of this equipment in a residential area is likely to cause harmful interference in which case the user will be required to correct the interference at his own expense.
This equipment complies with FCC radiation exposure limits set forth for an uncontrolled environment.
This equipment should be installed and operated with a minimum distance of 20 cm between the radiator & your body.

IC Compliance Statement

When using the product, maintain a distance of 20 cm from the body to ensure compliance with RF exposure requirements.
This device complies with Industry Canada licence-exempt RSS standard(s). Operation is subject to the following two conditions:
(1) this device may not cause interference, and
(2) this device must accept any interference, including interference that may cause undesired operation of the device.
This Class A digital apparatus complies with Canadian ICES-003.

Il doit être installé et utilisé à une distance minimale de 20 cm entre le radiateur et toute partie de votre corps.

Le présent appareil est conforme aux CNR d'Industrie Canada applicables aux appareils radio exempts de licence. L'exploitation est autorisée aux deux conditions suivantes:
(1) l'appareil ne doit pas produire de brouillage, et
(2) l'utilisateur de l'appareil doit accepter tout brouillage radioélectrique subi, même si le brouillage est susceptible d'en compromettre le fonctionnement.

Cet appareil numérique de la classe A est conforme à la norme NMB-003 du Canada.

CE

Hereby, EcoFlow Inc. declares that the radio equipment type portable power station is in compliance with Directives 2014/53/EU, 2014/30/EU, 2011/65/EU(RoHS), (EU) 2015/863(RoHS). The full text of the EU Declaration of Conformity is available at the following Internet address: http://www.ecoflow.com/eu/eu-compliance

This marking indicates that this product should not be disposed of with other household waste within the EU. Recycle this product properly to prevent possible damage to the environment or a risk to human health via uncontrolled waste disposal and in order to promote the sustainable reuse of material resources. Please return your used product to an appropriate collection point or contact the retailer where you purchased this product. Your retailer will accept used products and return them to an environmentally-sound recycling facility.

Appendix

What's in the Box

1. RIVER 3 / RIVER 3 (230) / RIVER 3 (10 ms UPS)
2. AC Charging Cable
3. Car Charging Cable
4. Manuals & Warranty card

Accessories

Learn More →

Specifications

General	
Model	**RIVER 3/RIVER 3 (10 ms UPS)**: EFR705 **RIVER 3 (230)**: EF-RV-H01-1
Net Weight	Approx. 3.5 kg (7.72 lb)
Dimensions (W×D×H)	Approx. 255 × 212 × 113 mm (10.04 × 8.35 × 4.45 in.)
Output	
AC Output Wave Form	Pure sine wave
AC Output (Discharge Only)	**US/BR**: 120V~60Hz, 300W total **JP**: 100V~50/60Hz, 300W total **CN**: 220V~50Hz, 300W total **KR**: 220V~60Hz, 300W total **EU/ZA/UK/AU/CH**: 230V~50Hz, 300W total
AC Output (Bypass Mode)	**US/JP/BR**: 100-120V~50/60Hz, 300W total **CN/EU/ZA/UK/AU/KR/CH**: 220-240V~50/60Hz, 300W total
USB-A Output	5V⎓2.4A, 12W Max per port, 24W total
USB-C Output	PD3.0, QC3.0 5/9/12/15V⎓3A Max, 20V⎓5A Max, 100W Max
DC Output	12.6V⎓10A, 126W Max
Total Output Power	550W
Input	
AC Input	**US/JP/BR**: 100-120V~50/60Hz, 6.5A Max **CN/EU/ZA/UK/AU/KR/CH**: 220-240V~50/60Hz, 3.0A Max

Solar Input	11-30V⎓8A, 110W Max
Car Input	12/24V⎓8A, 100W Max
Battery Info	
Rated Capacity	**RIVER 3/RIVER 3 (10 ms UPS)**: 245Wh 19.2V⎓12.8Ah **RIVER 3 (230)**: 230Wh 19.2V⎓12.0Ah
Cell Chemistry	LFP ($LiFePO_4$)
Cycle Life	The battery maintains 80%+ SoH (State of Health) after 3000 cycles at 0.5C/0.5C at 25°C (77°F)
Protection Type	Over Voltage Protection, Overload Protection, Over Temperature Protection, Short Circuit Protection, Low Temperature Protection, Low Voltage Protection, Overcurrent Protection
Environment Temperature	
Optimal Operating Temperature	20°C-30°C (68°F-86°F)
Charge Temperature	0°C-45°C (32°F-113°F)
Discharge Temperature	−10°C to 45°C (14°F-113°F)
Storage Temperature	−10°C to 45°C (optimal: 20°C-30°C) 14°F-113°F (optimal: 68°F-86°F)
Communications	
Method	Wi-Fi, Bluetooth
Wi-Fi (2.4G)	**Frequency** • CN/BR/MX: 2400-2483.5 MHz • EU/UK/JP/KR/AU: 2412-2472 MHz/2422-2462 MHz • TW/US/CA: 2412-2462 MHz/2422-2452 MHz **Maximum Output Power** • CN: ≤20dBm • US: 0.5297W • CA: 0.5297W • JP: 2.921mW/MHz • EU: 17.50dBm • UK: 17.50dBm • AU: 17.50dBm
Bluetooth	**Frequency** • CN/BR/MX: 2400-2483.5 MHz • EU/UK/TW/US/CA/JP/AU/KR: 2402-2480 MHz **Maximum Output Power** • CN: ≤20dBm • US: 0.1076W

	• CA: 0.1076W • JP: 3.67mW • EU: 9.50dBm • UK: 9.50dBm • AU: 9.50dBm
Other	
Operating Altitude	≤2000 m

Copyright © 2024 EcoFlow. All Rights Reserved.