THIS COPY IS PROVIDED ON A RESTRICTED BASIS AND IS NOT TO BE USED IN ANY WAY DETRIMENTAL TO THE INTERESTS OF PANDUIT CORP.

1. STANDARD:

   USE WITH UPS CAPACITY: SMARTZONE UPS TOWER BRACKETS UTOWFT FOR 1 TO 20KVA UPS ONLY

2. ADDITIONAL:
   NONE

3. ACCESSORY COMPONENTS:
   NONE

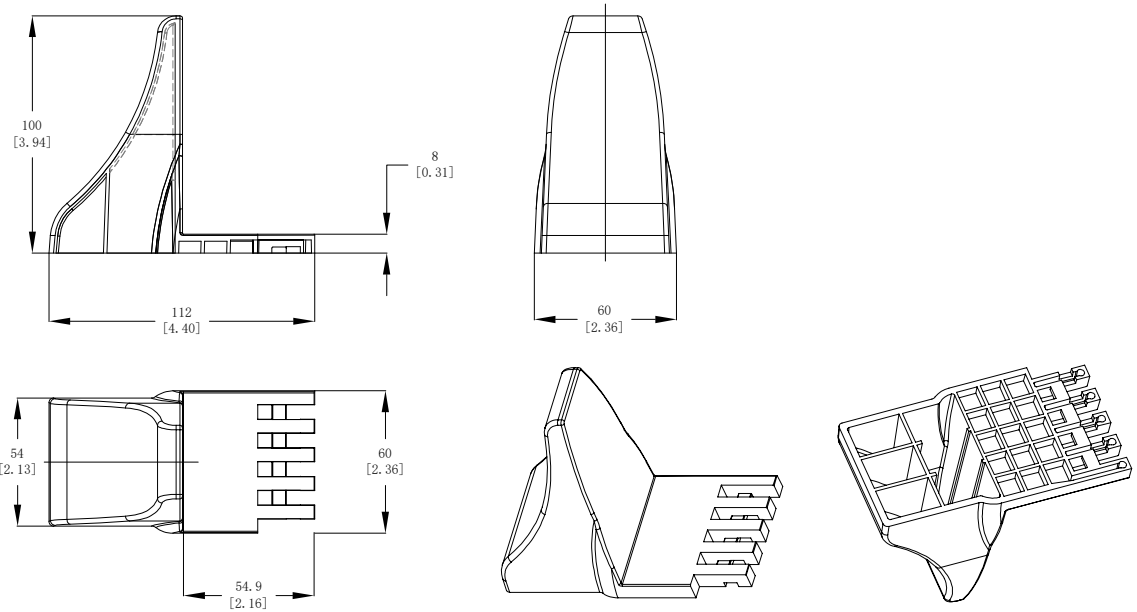

NOTES:
1. PRIMARY DIMENSIONS ARE IN MILLIMETERS. SECONDARY DIMENSIONS ARE IN INCHES
2. INSTALLATION SHALL COMPLY WITH ALL APPLICABLE NATIONAL, STATE, AND LOCAL CODES
3. VISIT OUR ON-LINE CATALOG AT WWW.PANDUIT.COM FOR A CURRENT LIST OF PRODUCTS APPLICABLE FOR USE WITH THIS PRODUCT
4. ALL PURCHASED ITEMS CONFORM TO C2-0834 PANDUIT SPECIFICATION FOR CHEMICAL SUBSTANCES TO BE CONTROLLED IN PRODUCT AND PACKAGING

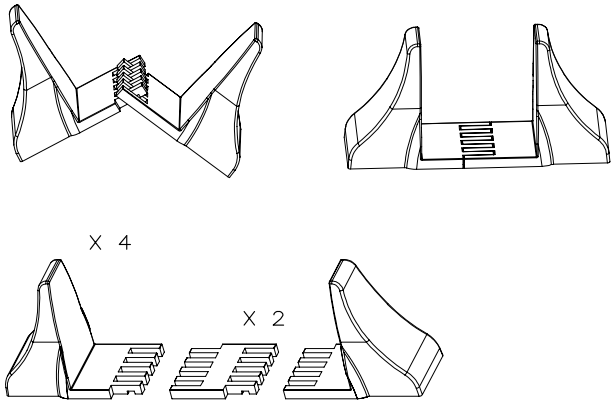

IDENTIFICATION:

PART NUMBER	DESCRIPTION	SHIPPING WEIGHT (KG)
UTOWFT	SMARTZONE UPS TOWER BRACKETS UTOWFT	1.5

REV	DATE	BY	CHK	APR	DESCRIPTION	ECN
00A	03/10/2022	DJL	ZRZ	GLM/DJB	RELEASE TO PRODUCTION	UTOWFT

BE SURE THAT YOU CHECK FULLY THE DIMENSIONS, NOTES AND SIGN THE CLIENT SIGNATURE BOX.
THE JOB WILL NOT PROGRESS WITHOUT SIGNED PROOF AND THE ONUS IS ON YOU TO RETURNING PROOF AS IT WILL AFFECT DELIVERY.

SIGN
DATE
PRINT

TITLE: SMARTZONE UPS TOWER BRACKETS UTOWFT

CUSTOMER DRAWING

NEW PRODUCT NAME: UTOWFT/00
DATASHEET FILE NAME: UTOWFT-DC/00A

UNLESS OTHERWISE SPECIFIED, DIMENSIONAL TOLERANCES ARE: MM [IN]

THIRD ANGLE PROJECTION

MATERIAL: N/A

DRAWN BY: MJD | DATE: 03/10/2022 | UNIT: | SCALE: VARIOUS | SHT 1 OF 2

DRAWING NUMBER: UTOWFT-DC

SIZE: D

D0100205/R8

THIS COPY IS PROVIDED ON A RESTRICTED BASIS AND IS NOT TO BE USED IN ANY WAY DETRIMENTAL TO THE INTERESTS OF PANDUIT CORP.

CIRCUIT BOARD BUILDING BLOCKS

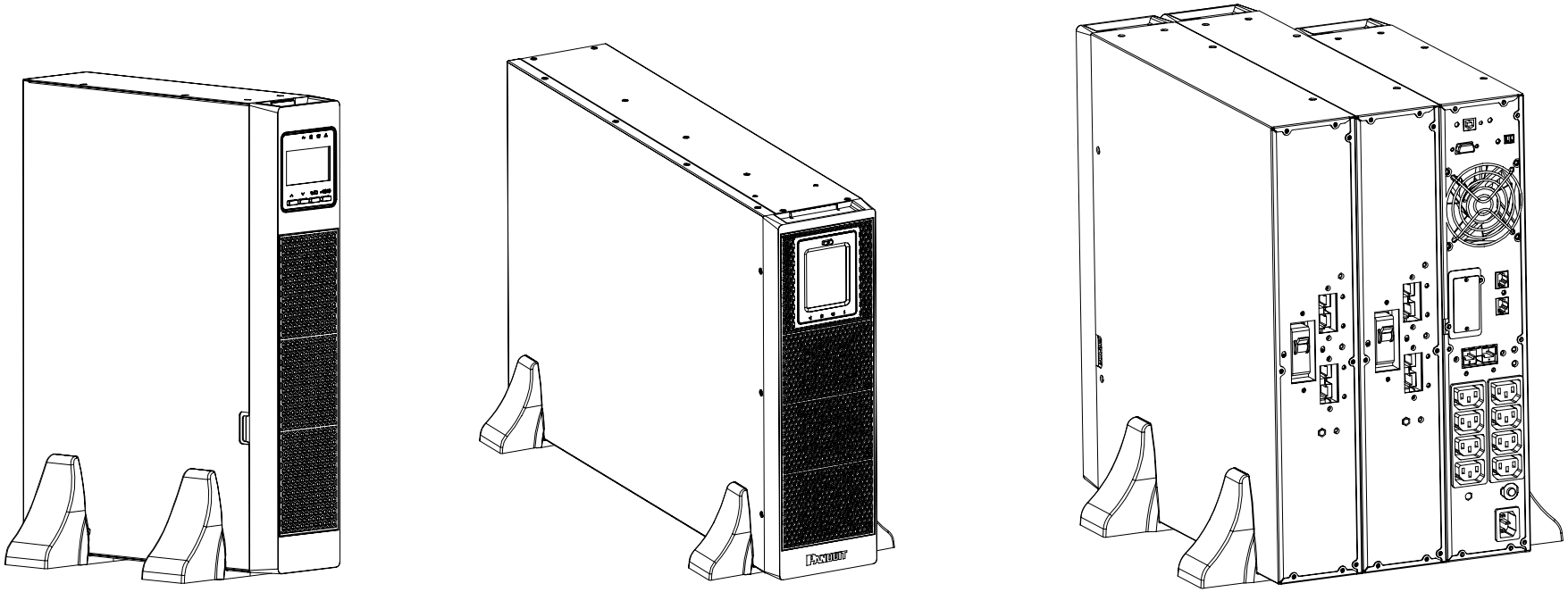

REV	DATE	BY	CHK	APR	DESCRIPTION	ECN
00A	03/10/2022	DJL	ZRZ	GLM/DJB	RELEASE TO PRODUCTION	UTOWFT

WE ASK THAT YOU CHECK FULLY THE DRAWING(S) ATTACHED, AND SIGN THE CLIENT SIGNATURE BOX.
THE JOB WILL NOT PROCEED WITHOUT CLIENT APPROVAL. PLEASE DO NOT DELAY IN RETURNING PROOF AS IT WILL AFFECT DELIVERY.

SIGN
DATE
PRINT

TITLE
SMARTZONE UPS TOWER BRACKETS UTOWFT

CUSTOMER DRAWING

ITEM REVISION NAME: UTOWFT/00
REVISIT FILE NAME: UTOWFT-DC/00A

UNLESS OTHERWISE SPECIFIED DIMENSIONAL TOLERANCES ARE: MM [IN]

MATERIAL: N/A

THIRD ANGLE PROJECTION

DRAWING NUMBER: UTOWFT-DC

DRAWN BY: DATE 03/10/2022 | CHK MJD | SCALE VARIOUS | SHT 1 OF 2 | SIZE D

PANDUIT

DTX0000/V.18