THIS COPY IS PROVIDED ON A RESTRICTED BASIS AND IS NOT TO BE USED IN ANY WAY DETRIMENTAL TO THE INTERESTS OF PANDUIT CORP.

PANDUIT PART NUMBER	MATERIAL	USES BUCKLE PART NUMBER	STRAPPING WIDTH	STRAPPING THICKNESS	MATERIAL LENGTH
ESW16T76-CR2	201 SS	ESBE 16-C2	15.9 ±0.3 [0.63 ±0.01]	0.76 ±0.13 [0.030 ±0.005]	30.5 m [100 FT.]

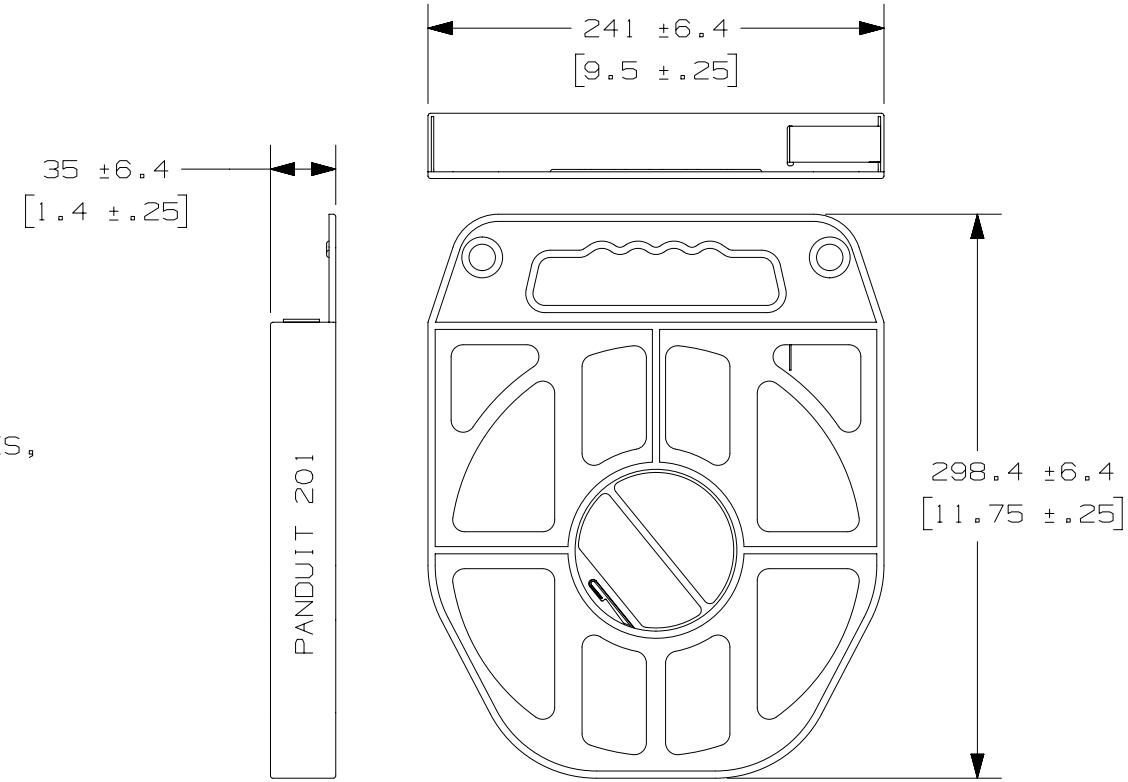

NOTES:

1. APPLICATION TOOL: BT75SDT
2. BRACKETS [ ] DENOTE DIMENSIONS IN INCHES, AND ARE SHOWN FOR REFERENCE ONLY
3. MATERIAL: SEE TABLE
4. COMPATIBLE BUCKLES: SEE TABLE

REV	DATE	BY	CHK	APR	DESCRIPTION	ECN
00	05-09-17	JBN	SKB	RGRO	DRAWING RELEASED	

TITLE

ES16 STRAPPING
COIL-IN-A-BOX

CUSTOMER DRAWING

ITEM REVISION NAME: 00225NEE/00

DATASET FILE NAME: 00225NEE_DC/00A

UNLESS OTHERWISE SPECIFIED, DIMENSIONAL TOLERANCES ARE: IN [mm]

.X ± .XXX ±
.XX ± ANGLES ±

THIRD ANGLE PROJECTION

MATERIAL: SEE NOTES

DRAWING NUMBER: 00225NEE_DC

DRAWN BY	DATE	CHK	SCALE	SHT 1 OF 1	SIZE
JBN	05-09-17	SKB	NONE		A

D10100DA/20