72' T300 TITAN TOWER

(P/N 4.95.0308.000)

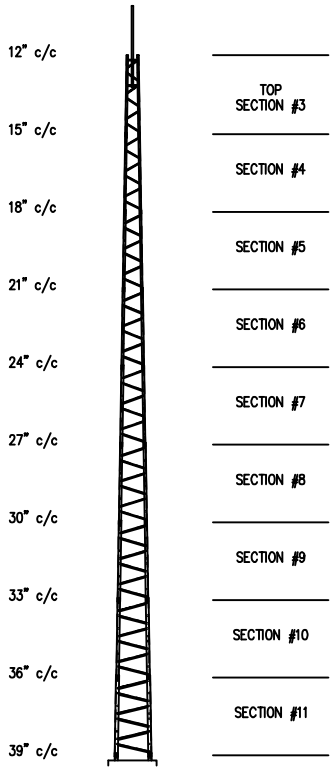

SECTION SPLICE

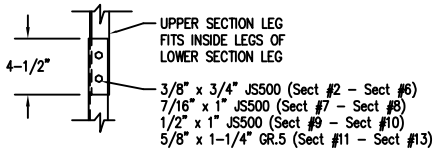

TOP ELEVATION

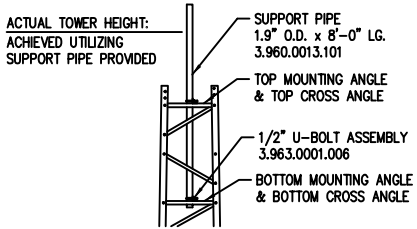

FOUNDATION DESIGN (NORMAL DRY SOIL)

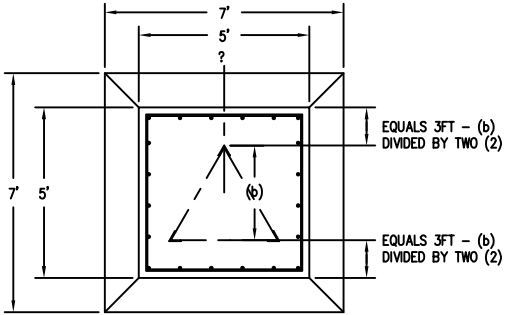

MAXIMUM ALLOWABLE ANTENNA AREA		
SURVIVAL DESIGN NO ICE (ROUND/FLAT)		
70mph WIND	85mph WIND	100mph WIND
25/17 (sqft)	9/6 (sqft)	--/--

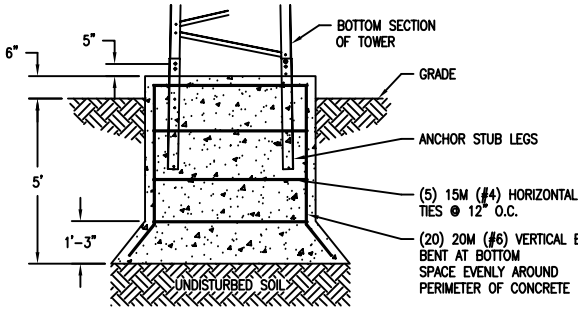

1) PRE-ASSEMBLED PART NUMBER 4.95.0308.000.
2) MAX. ANTENNA LOADS ARE CENTRALLY LOCATED AND BALANCED, 3FT OR LESS ABOVE THE TOWER TOP.
3) "SURVIVAL" DESIGN IN NOT THE SAME AS EIA-222. FOR EIA COMPLIANCE SEE OUR SUPERTITAN MODELS.
4) MINIMUM 32ksi YIELD FOR ALL COMPONENTS.
5) CONSTRUCTED FROM PASSIVATED G-90 COAT GALVANIZED STEEL SHEET.
6) TOWERS COME ASSEMBLED IN 8FT SECTIONS.
7) TOP SUPPORT PIPE IS INCLUDED.
8) FOR OPTIONAL ROCK BOLT FOUNDATION SEE DWG 000001.610.0033 AND 000001.610.0021.

FOUNDATION LOADS:
MAX. OVERTURNING MOMENT (K*FT) = 67.00
MAX. SHEAR (kips) = 1.7
DESIGN UPLIFT PER INDIVIDUAL LEG (kips) = 23.0

CONCRETE VOLUME:
6.0 CUBIC YARDS

REV.	BY: REV.	BY: CHK.	DESCRIPTION	DATE

REFERENCE DRAWINGS:

DRAWING NUMBER	DRAWING NUMBER

CONFIDENTIAL: ALL INTELLECTUAL PROPERTY RIGHTS HEREIN ARE THE PROPERTY OF TRYLON INC. ALL DUPLICATION, RECORDING, DISCLOSURE OR USE IS PROHIBITED WITHOUT WRITTEN CONSENT OF TRYLON INC.

Trylon

DRAWING NO. 00001.610.0098

CUSTOMER: | SITE: | SCALE: 115.000

DATE: 08 MAR 07 | BY: MRH | CHK: CR | APP: JB

TITLE: 72' T300 TITAN TOWER