70FT S300 SUPERTITAN TOWER

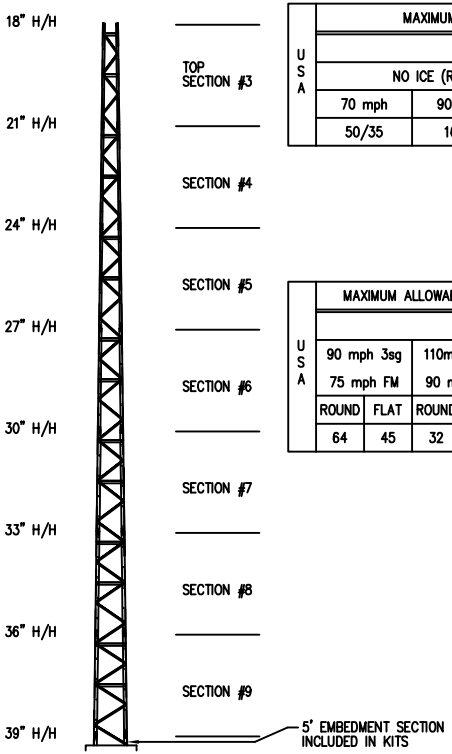

USA	MAXIMUM ALLOWABLE ANTENNA AREA – PER TIA/EIA 222 REV. F					
	WIND VELOCITY RATINGS					
	NO ICE (ROUND/FLAT)			1/2" ICE (ROUND/FLAT)		
	70 mph	90 mph	100 mph	70 mph	90 mph	100 mph
	50/35	16/11	5/3	42/30	13/9	5/3

FOUNDATION LOADS:
MAX. OVERTUNRING MOMENT (K*FT) =
MAX. SHEAR (kips) =
MAX. AXIAL (kips) =

USA	MAXIMUM ALLOWABLE ANTENNA AREA – PER TIA/EIA 222 REV. G, CLASS 1 (NO ICE)						
	WIND VELOCITY RATINGS						
	90 mph 3sg 75 mph FM		110mph 3sg 90 mph FM		120 mph 3sg 100 mph FM		3sg = 3 SECOND GUST WINDSPEED FM = FASTEST MILE WINDSPEED
	ROUND	FLAT	ROUND	FLAT	ROUND	FLAT	
	64	45	32	22	21	15	

FOUNDATION LOADS:
MAX. OVERTUNRING MOMENT (K*FT) =
MAX. SHEAR (kips) =
MAX. AXIAL (kips) =

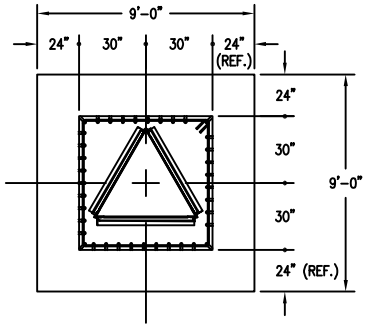

CUBIC YARDS OF CONCRETE		
PAD CONC VOL.	PIER CONC VOL.	TOTAL VOL.
4.5	3.2	7.7

FOUNDATION DESIGN (NORMAL DRY SOIL)

DESIGN ASSUMES THAT FROST DEPTH IS LESS THAN 4'-0"

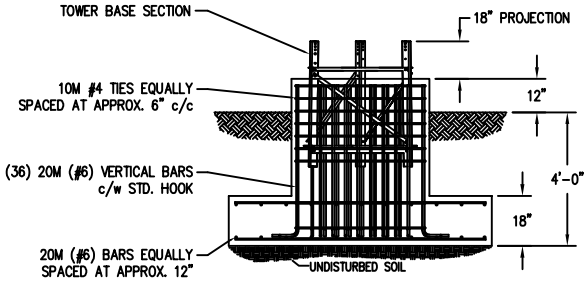

NOTES:
1) KNOCK-DOWN PART NUMBER 5.94.0300.070.
2) PRE-ASSEMBLED PART NUMBER: 5.95.0300.070.
3) ANTENNA LOADS ARE CENTRALLY LOCATED AND BALANCED, 3-FT OR LESS ABOVE THE TOWER TOP.
4) WIND LOADING ASSUMES (1) 1/2" TRANSMISSION LINE PER 10 SQ.FT. OF ROUND MEMBER ANTENNA AREA.

REV.	BY: REV.	BY: CHK.	DESCRIPTION	DATE

REFERENCE DRAWINGS:

DRAWING NUMBER	DRAWING NUMBER

CONFIDENTIAL: ALL INTELLECTUAL PROPERTY RIGHTS HEREIN ARE THE PROPERTY OF TRYLON INC. ALL DUPLICATION, RECORDING, DISCLOSURE OR USE IS PROHIBITED WITHOUT WRITTEN CONSENT OF TRYLON INC.

Trylon

DRAWING NO. 000001.620.0183

CUSTOMER:
SITE:
SCALE: 115
DATE: 08 FEB 07
BY:
CHK:
APP:

TITLE: 70FT S300 SUPERTITAN PROFILE