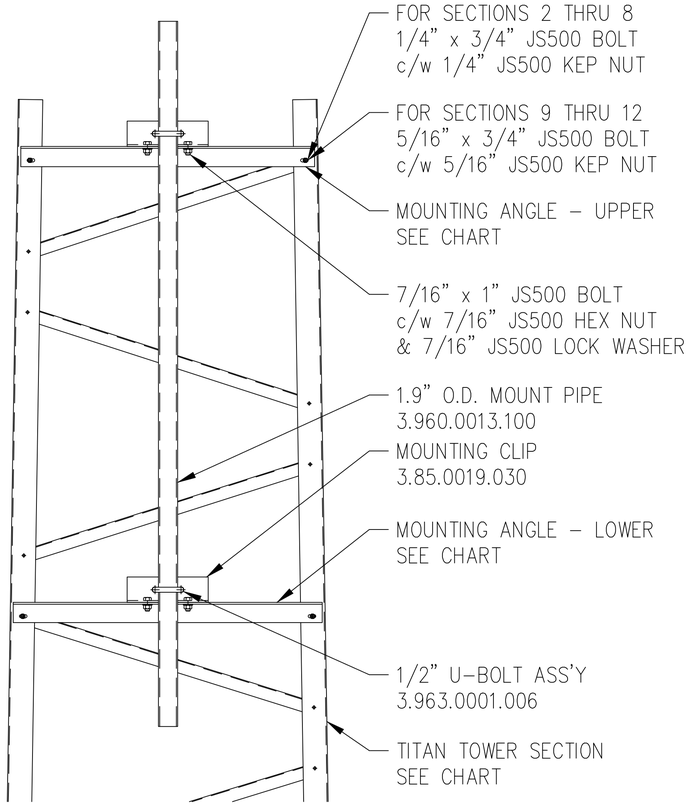

SIDE MOUNT KIT	UPPER MNT ANGLE	LOWER MNT ANGLE	SECTION
4.84.1141.000	3.85.0019.001	3.85.0019.002	2
4.84.1142.000	3.85.0019.003	3.85.0019.004	3
4.84.1151.000	3.85.0019.005	3.85.0019.006	4
4.84.1152.000	3.85.0019.007	3.85.0019.008	5
4.84.1161.000	3.85.0019.009	3.85.0019.010	6
4.84.1162.000	3.85.0019.011	3.85.0019.012	7
4.84.1171.000	3.85.0019.013	3.85.0019.014	8
4.84.1172.000	3.85.0019.015	3.85.0019.016	9
4.84.1181.000	3.85.0019.017	3.85.0019.018	10
4.84.1182.000	3.85.0019.019	3.85.0019.020	11
4.84.1191.000	3.85.0019.021	3.85.0019.022	12

REV.	BY: REV.	BY: CHK.	DESCRIPTION	DATE

REFERENCE DRAWINGS:

DRAWING NUMBER	DRAWING NUMBER

CONFIDENTIAL: ALL INTELLECTUAL PROPERTY RIGHTS HEREIN ARE THE PROPERTY OF TRYLON INC. ALL DUPLICATION, RECORDING, DISCLOSURE OR USE IS PROHIBITED WITHOUT WRITTEN CONSENT OF TRYLON INC

Trylon

DRAWING NO.
000001.610.0024

NOTES:

CUSTOMER:	SITE:	SCALE: 15.000

DATE: 28 JAN 00	BY: JAG	CHK:	APP:

TITLE:
SIDE MOUNT KIT INSTALL